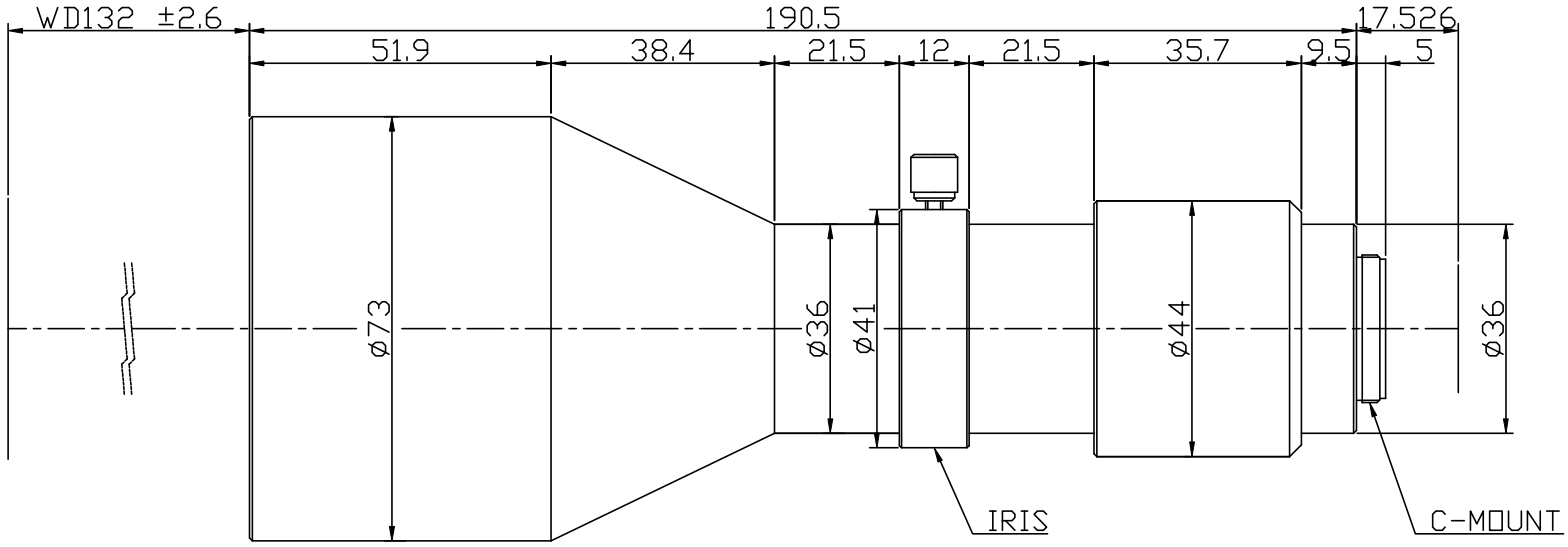

Optical Mgnification	0.49X	W.D(mm)	132
Resolution(um)	8.91	N.A	0.038
F/#	6.5	D.O.F (um)	542
Optical Distortion(%)	< 0.05%	Telecentricity Angle	< 0.03°

Prohibited modification discretionally
Do not serve to a third party without permission

UNIT	MODEL	
mm	TCL0.49X-132I-HS3	
MATERIAL	DWG NO.	SPO Inc. Standard & Precision Optics