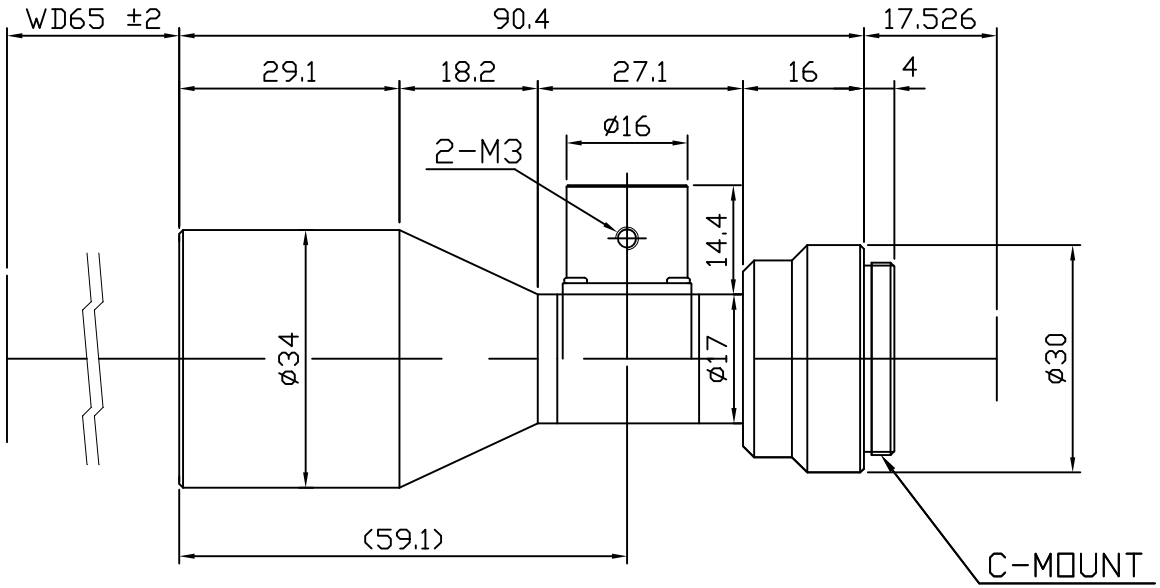

Optical Mgnification	0.5X	W.D(mm)	65
Resolution(um)	11.2	N.A	0.03
F/#	8.3	D.O.F (COC:20um)	1.3mm
Optical Distortion(%)	<0.03%	Telecentricity	< 0.04°

Prohibited modofication discreationally
Do not serve to a third party without any permission

UNIT	MODEL	
mm	TCL0.5X-65D-HR	
MATERIAL	DWG NO	SPO Inc. Standard & Precision Optics