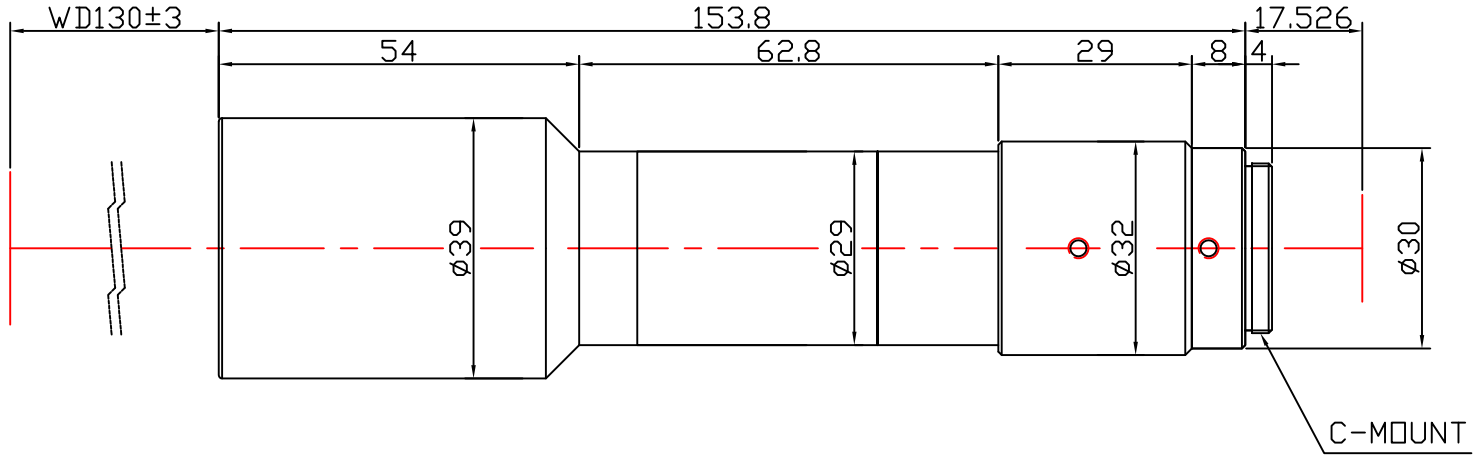

Optical Mgnification	0.8X	W.D(mm)	130
Resolution(um)	8.4	N.A	0.04
F/#	10	D.O.F (COC:22um)	687um
Optical Distortion(%)	< 0.03%	Telecentricity	< 0.03°
F.O.V : 14.07mm X 14.07mm @ 4M (Diagonal : 16mm) ccd camera			

Prohibited modofication discreationally
Do not serve to a third paty without permission

UNIT	MODEL	
mm	TCL0.8X-130-4M	
MATERIAL	DWG NO.	SPO Inc. Standard & Precision Optics