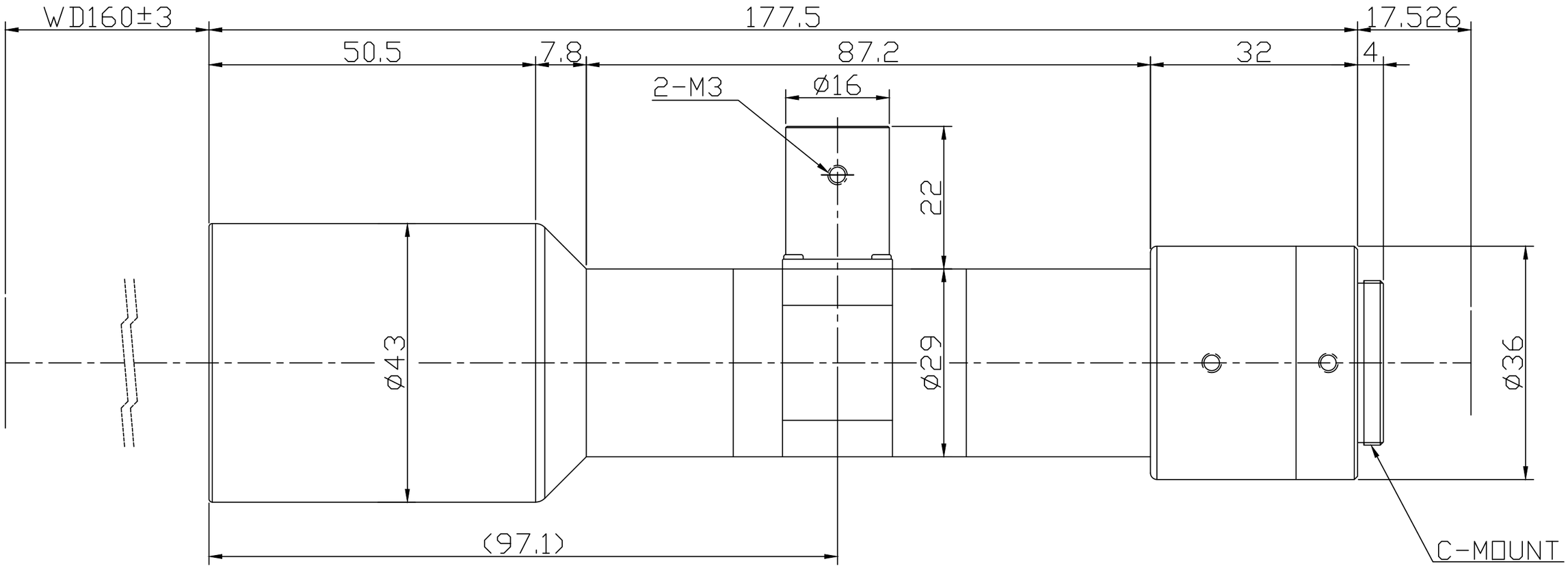

Optical Magnification	0.8X	W.D(mm)	160
Resolution(um)	6.71	N.A	0.05
F/#	8	D.O.F (COC:22um)	550um
Optical Distortion(%)	< 0.03%	Telecentricity	< 0.04°
F.O.V : 14.08 X 14.08mm @ 4M (Diagonal : 16mm) ccd camera			

Prohibited modification discretionally
Do not serve to a third party without permission

UNIT	MODEL
mm	TCL0.8X-160D-4M-16
MATERIAL	DWG NO.

SPO Inc.
Standard & Precision Optics