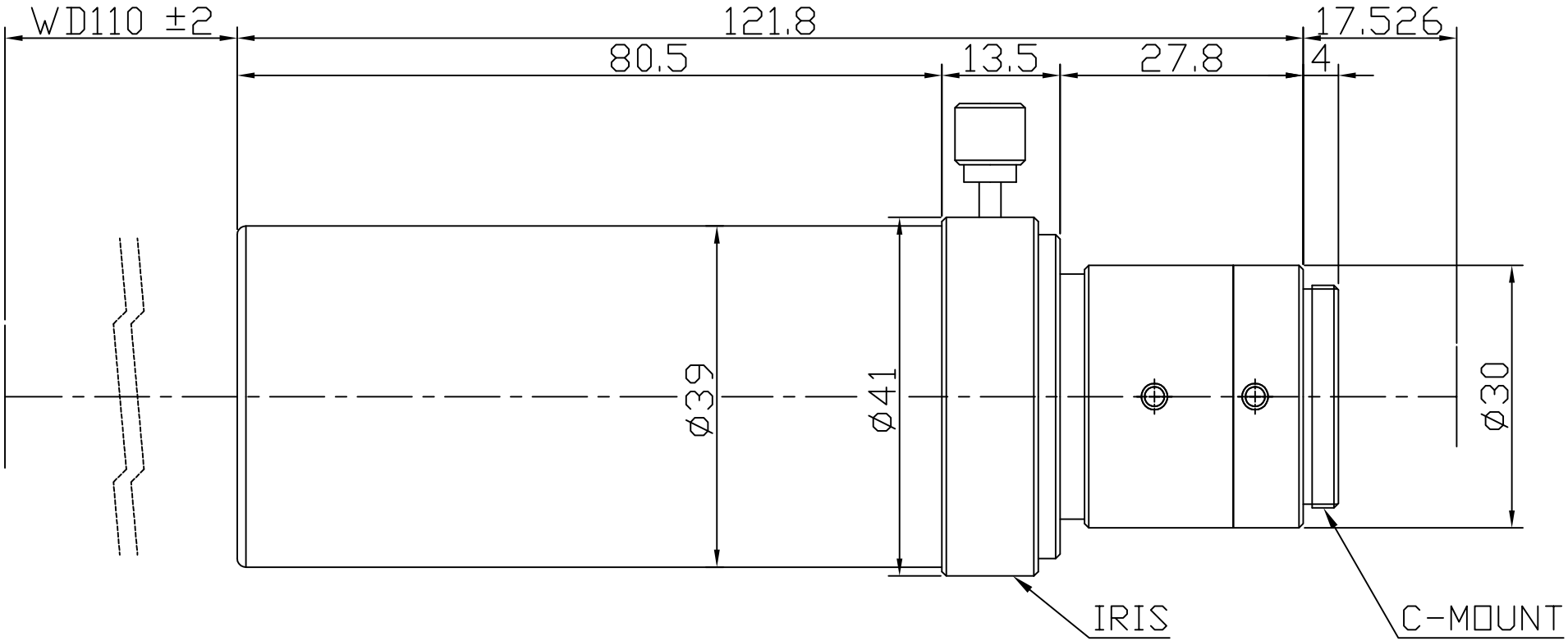

Optical Mgnification	0.7X	W.D(mm)	110
Resolution(um)	5.154	N.A	0.0651
F/#	5.37	D.O.F (COC:20um)	438.37um
Optical Distortion(%)	< 0.03%	Telecentricity Angle	< 0.04°
F.O.V : 12.57mm X 9.43mm @ 5M ccd camera			

Prohibited modification discretionally
Do not serve to a third party without permission

UNIT	MODEL	
mm	TCL0.7X-110I-5M	
MATERIAL	DWG NO.	SPO Inc. Standard & Precision Optics