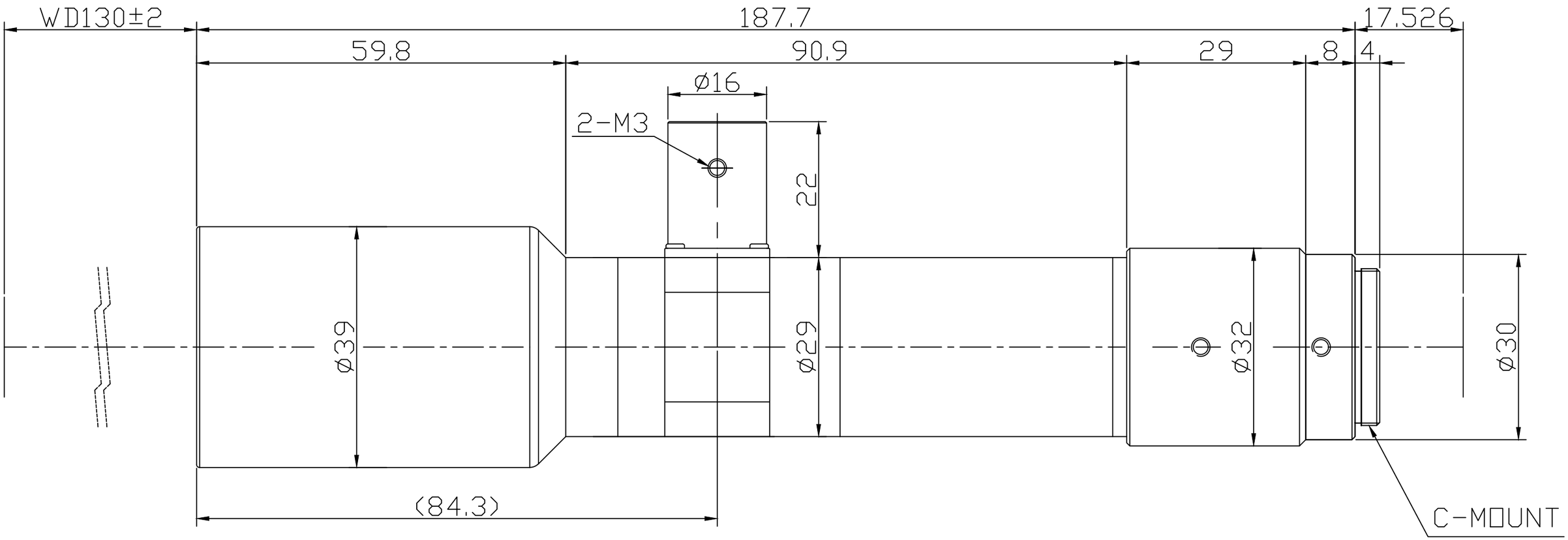

Optical Magnification	1.0X	W.D(mm)	130
Resolution(um)	5.99	N.A	0.056
F/#	9	D.O.F (COC:22um)	396um
Optical Distortion(%)	< 0.03%	Telecentricity	< 0.03°
F.O.V : 11.26mm X 11.26mm @ 4M (Diagonal : 16mm) ccd camera			

Prohibited modification discretionally
Do not serve to a third party without permission

UNIT	MODEL
mm	TCL1.0X-130D-4M-16
MATERIAL	DWG NO.

SPO Inc.
Standard & Precision Optics