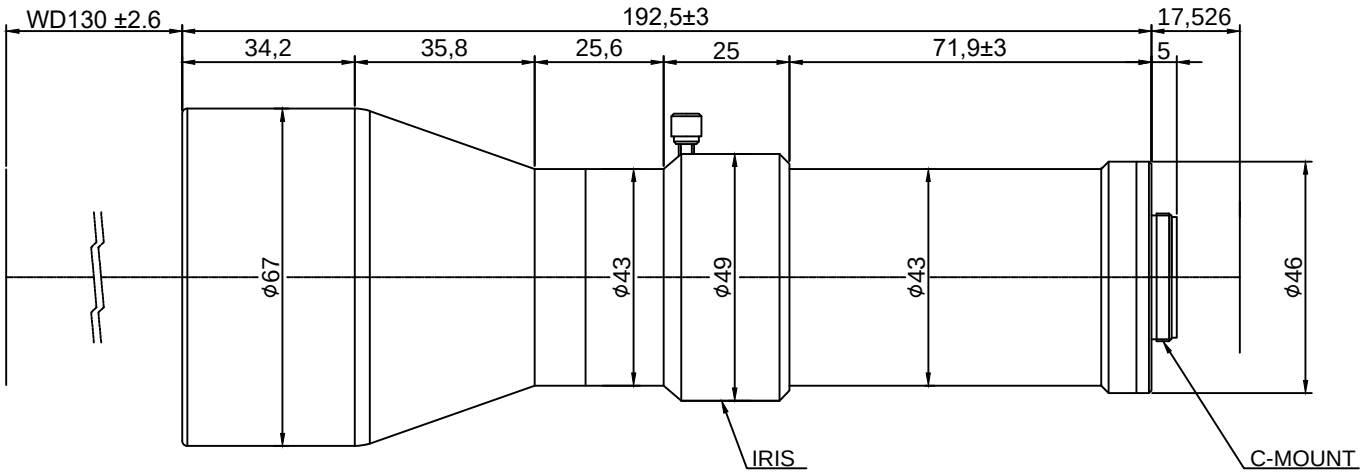

Optical Mgnification	0.7X	W.D(mm)	130
Resolution(um)	7.67	N.A	0.044
F/#	8	D.O.F (COC:22um)	327
Optical Distortion(%)	< 0.05%	Telecentricity	< 0.03°

Prohibited modification discretionally
Do not serve to a third party without permission

UNIT	MODEL	
mm	TCL0.7X-130I-HS3	
MATERIAL	DWG NO.	SPO Inc. Standard & Precision Optics